Company	:	LDEO
Vessel	:	Marcus G.Langseth
Client	:	NSF
Project	:	MGL-1307 NSF / Sawyer 3D
Area	:	Galicia- Offshore Spain
Start Date	:	01 June 2013

Vessel Sensor Offsets

Towing Offsets

Towing Configuration

Acoustic Offsets

Gun Array Offsets

Gun Configuration

Streamer Front End

Tailbuoy Offsets

Timing

R/V Marcus G. Langseth - Vessel Sensor Offsets

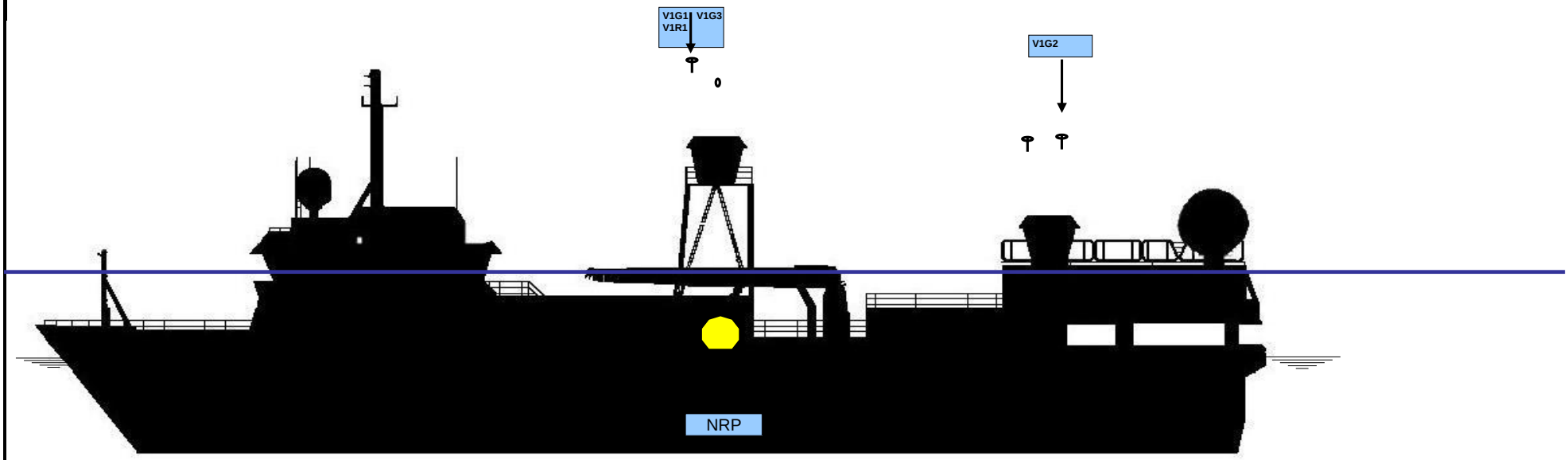

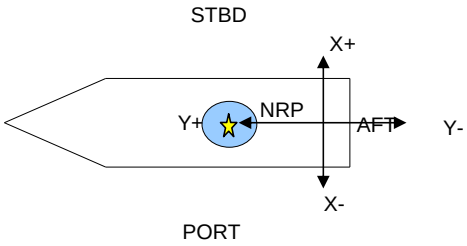

All measurements in meters

		FORE/AFT (Y)	STBD/PORT (X)	UP/DOWN (Z)
NRP	NAVIGATION REFERENCE POINT	0.00	0.00	0.00
V1G1	C-Nav 3050	0.00	0.00	16.90
V1G2	C-Nav 2000	-16.27	4.87	14.00
V1G3	SeaPath 200	0.00	-1.00	16.90
V1R1	PosNet	0.00	-1.50	16.90
V1E1	Echosounder (Center beam from Multibeam)	13.40	0.00	-6.44

R/V Marcus G. Langseth - Towing Offsets

***** Offsets used for sequences *****

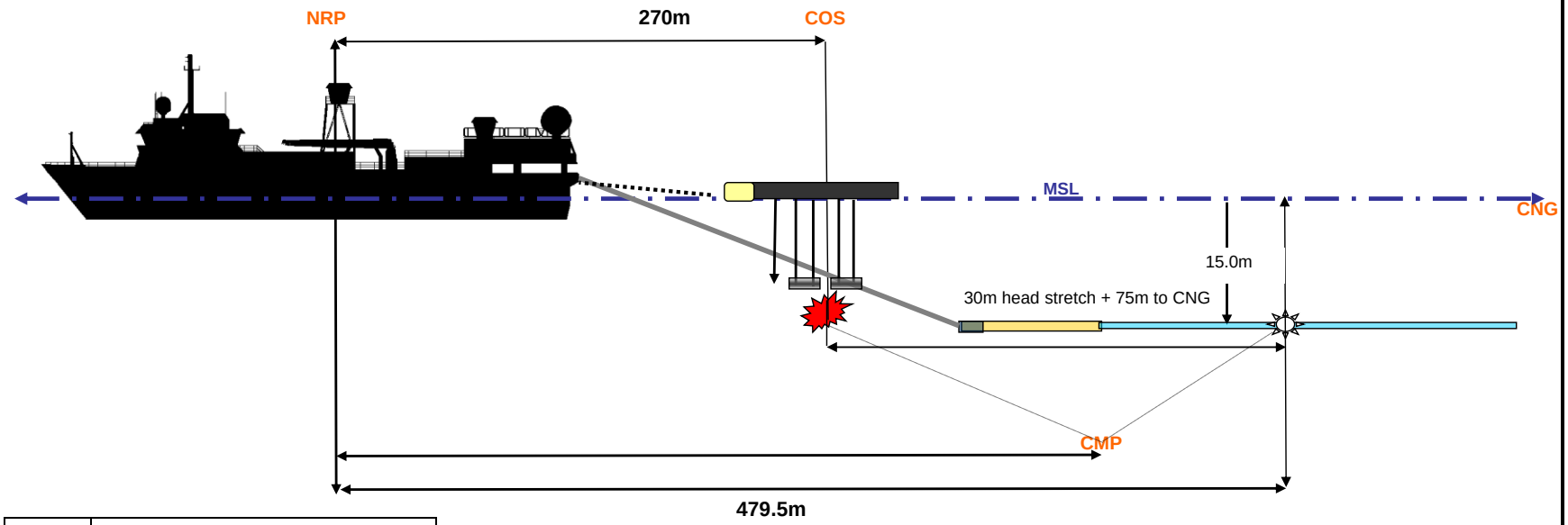

NRP	**N**av **R**eference **P**oint
COS	**C**entre of **S**ource
CNG	**C**entre of **N**ear **G**roup (Trace # 001 of:S1; S2; S3; S4)
CMP	**C**ommon **M**id-**P**oint
MSL	**Mean Sea Level**
NRP-Stern	**29.5m**
NRP-COS(G1-G2)	**270m**

Seq001-010 Nominal streamer depth was 12m
Seq011-End Nominal streamer depth was 15m

All measurements in meters

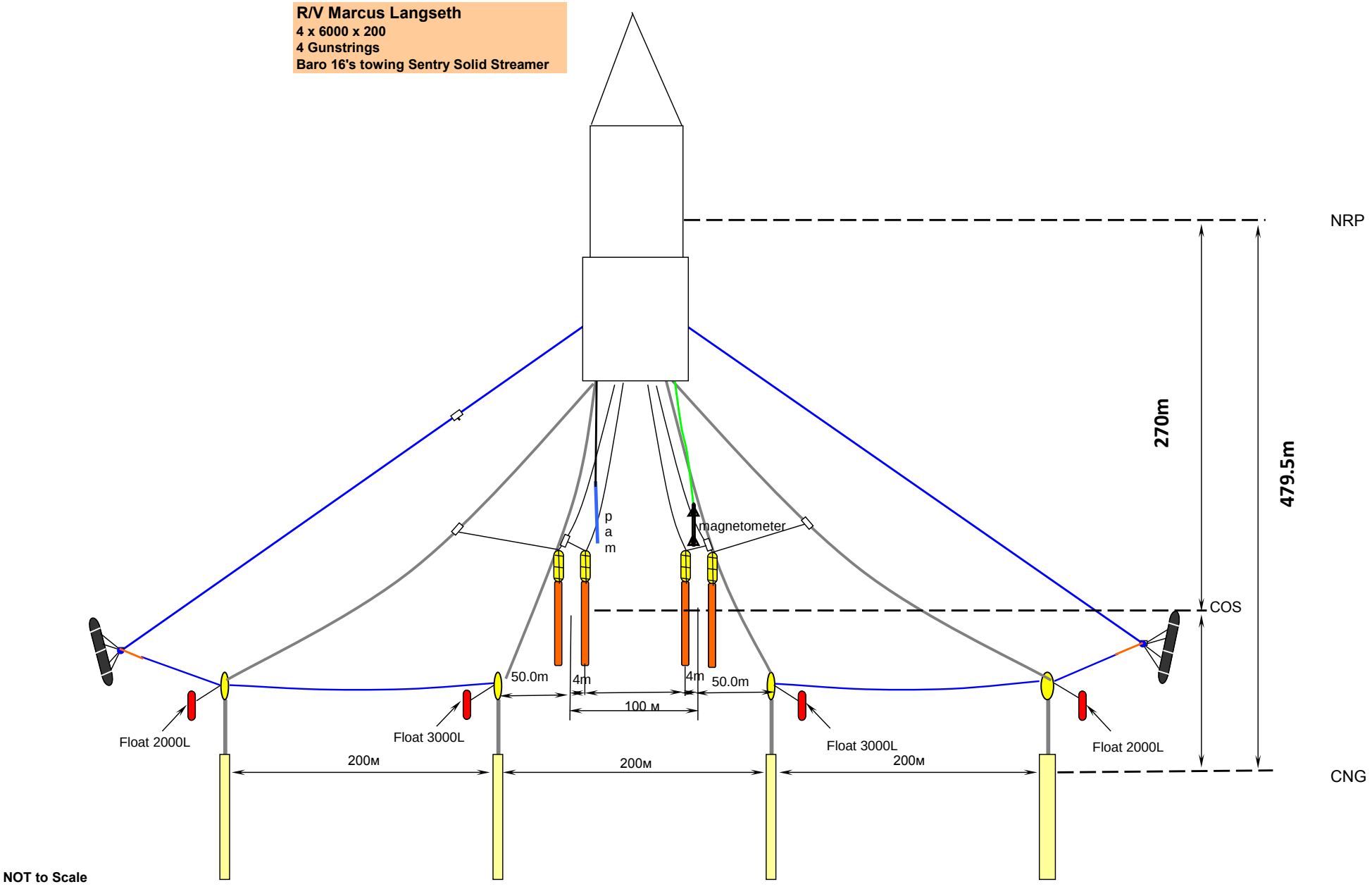
R/V Marcus Langseth
4 x 6000 x 200
4 Gunstrings
Baro 16's towing Sentry Solid Streamer
NRP
270m
479.5m
COS
CNG
p
a
m
magnetometer
50.0m
4m
4m
50.0m
100 м
Float 2000L
Float 3000L
Float 3000L
Float 2000L
200м
200м
200м
NOT to Scale

R/V Marcus G. Langseth - Acoustic Offsets

Digicourse

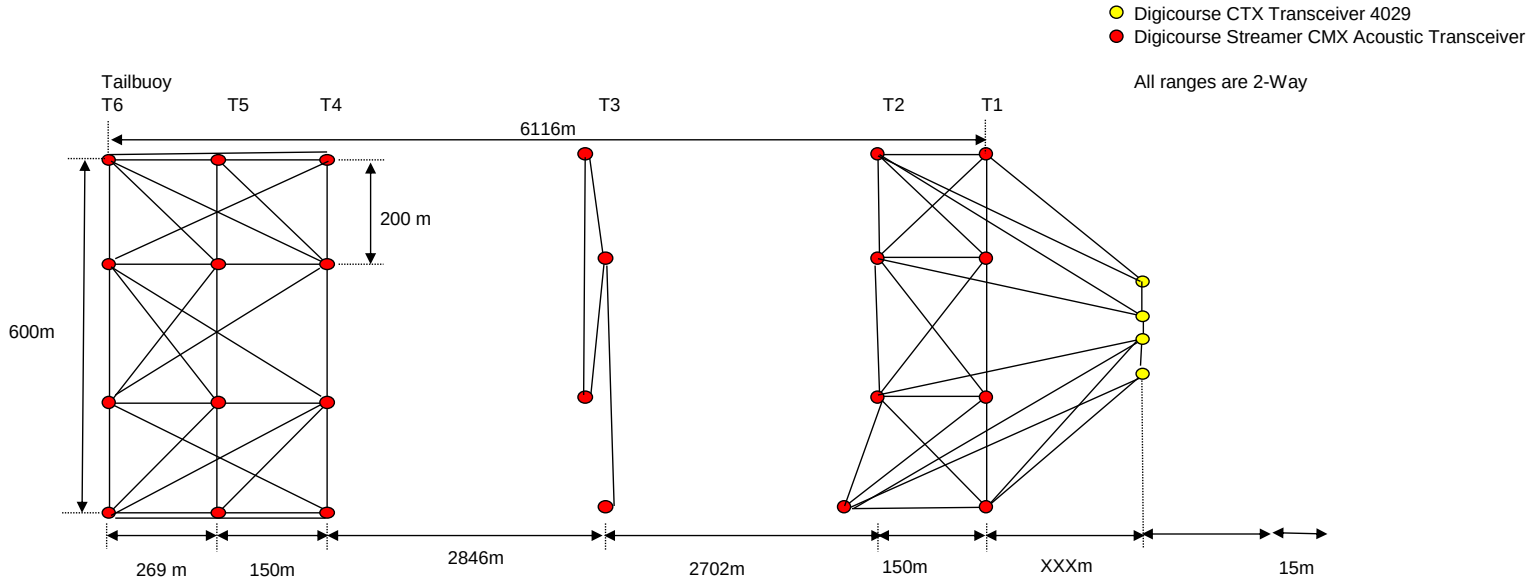

All measurements in meters

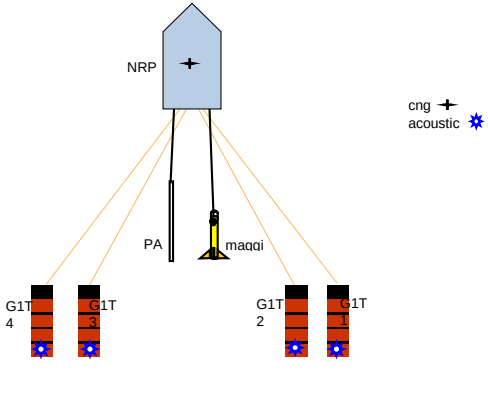

cng -> S1T1 = -37.11m
cng -> S1T2 = -186.38m
G1T1 -> G1S1: x = 0.0 y = -8.00 z = -12.25
G1T2 -> G1S2: x = 0.0 y = -8.00 z = -12.25
G1T3 -> G1S3: x = 0.0 y = -8.00 z = -12.25
G1T4 -> G1S4: x = 0.0 y = -8.00 z = -12.25

Cable acoustic offsets are referenced to cng on individual streamers

Tailbuoy acoustics referenced to RGPS pod

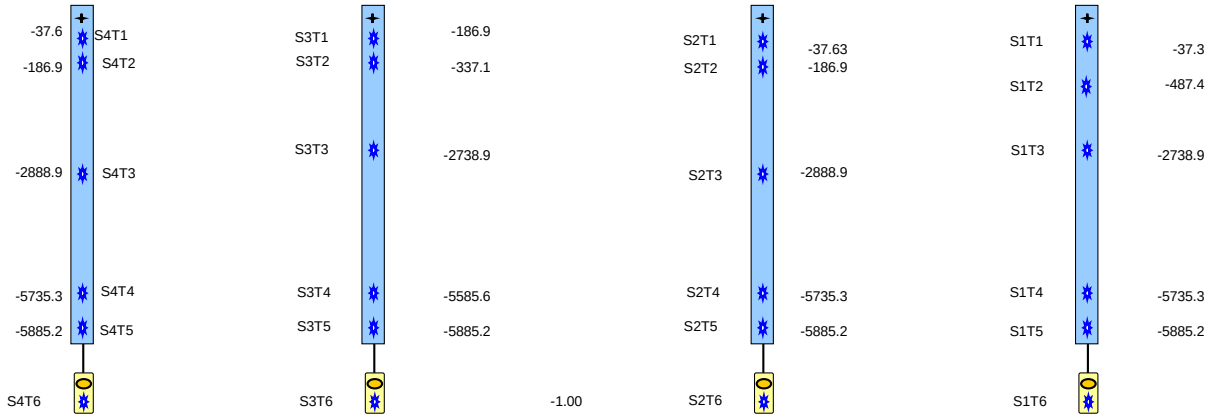

R/V Marcus G. Langseth - Gun Array Offsets

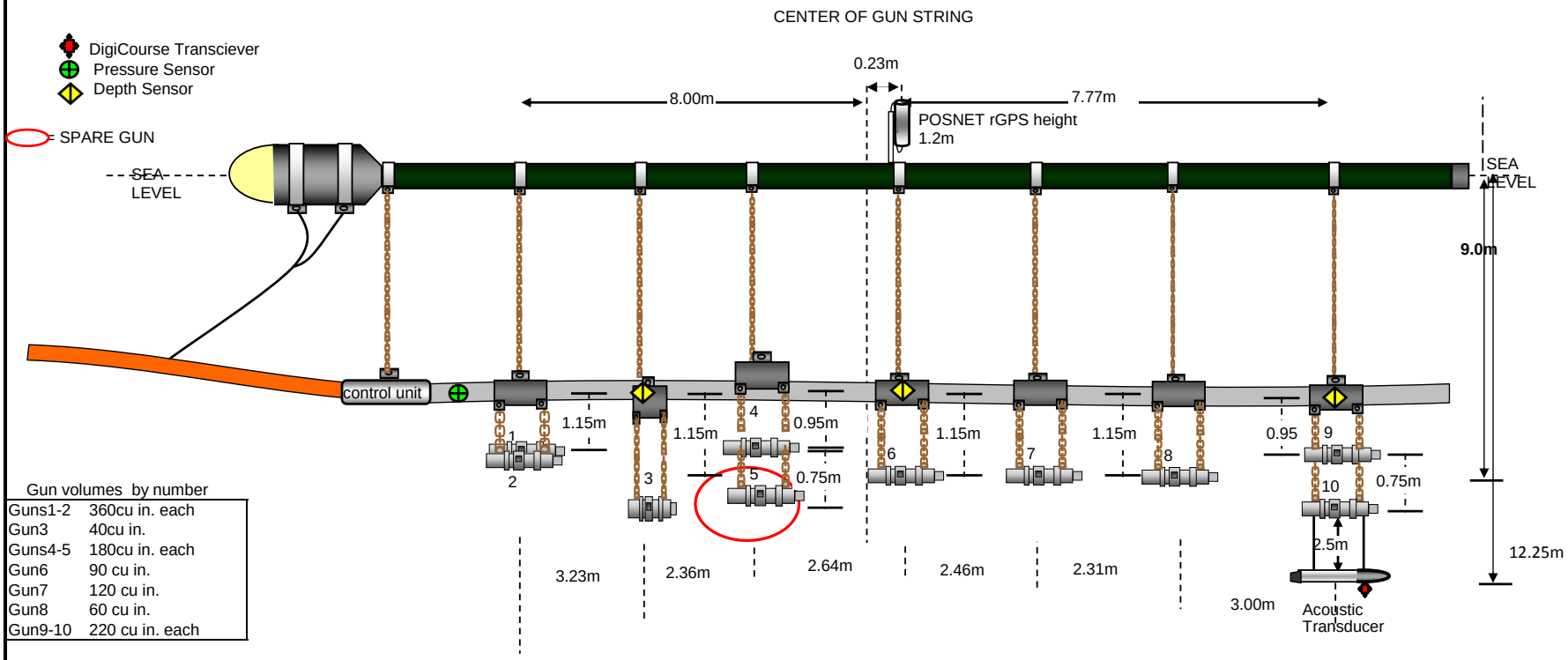

Gun volumes by number

Guns1-2	360cu in. each
Gun3	40cu in.
Guns4-5	180cu in. each
Gun6	90 cu in.
Gun7	120 cu in.
Gun8	60 cu in.
Gun9-10	220 cu in. each

Array total volume (without spares) is 6600 cubic inches.
All guns 1 & 2 are in a 0.9m horizontal cluster; gun clusters 4 & 5; 9 & 10 hang vertically
Vertical clusters have 0.75m between guns and hang 0.95m from center of hanger
All gun strings have the same offsets

All gun volumes, numbering, locations, and offsets approved by chief gunner Tom Spoto.

Total volume per string (without spare) 1650 cubic inches.

Single guns hang from hanger 1.15m

All measurements in meters

NOTE: drawing not to scale

r/v Marcus G. Langseth - Gun Configuration

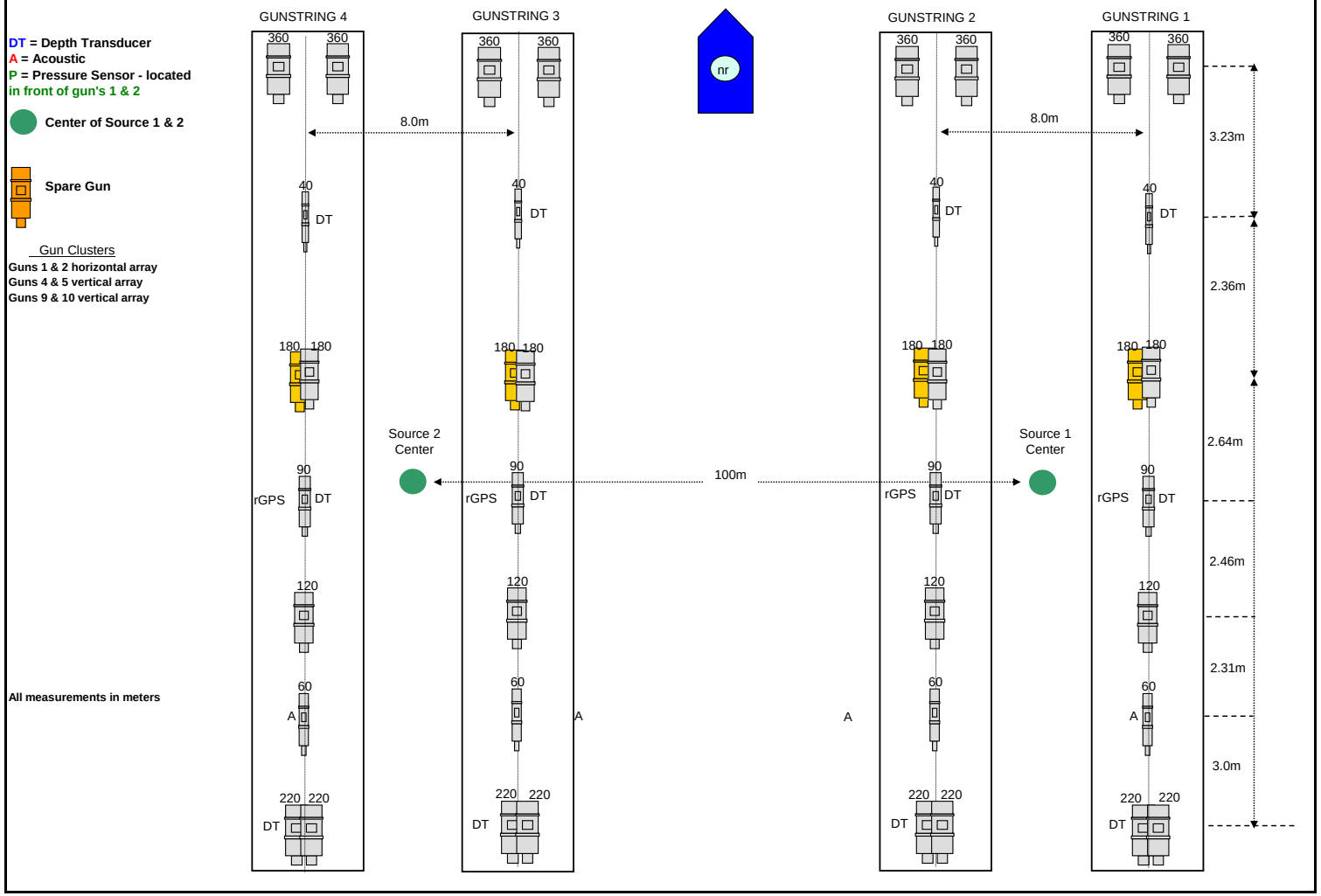

R/V Marcus G. Langseth - Streamer Front End

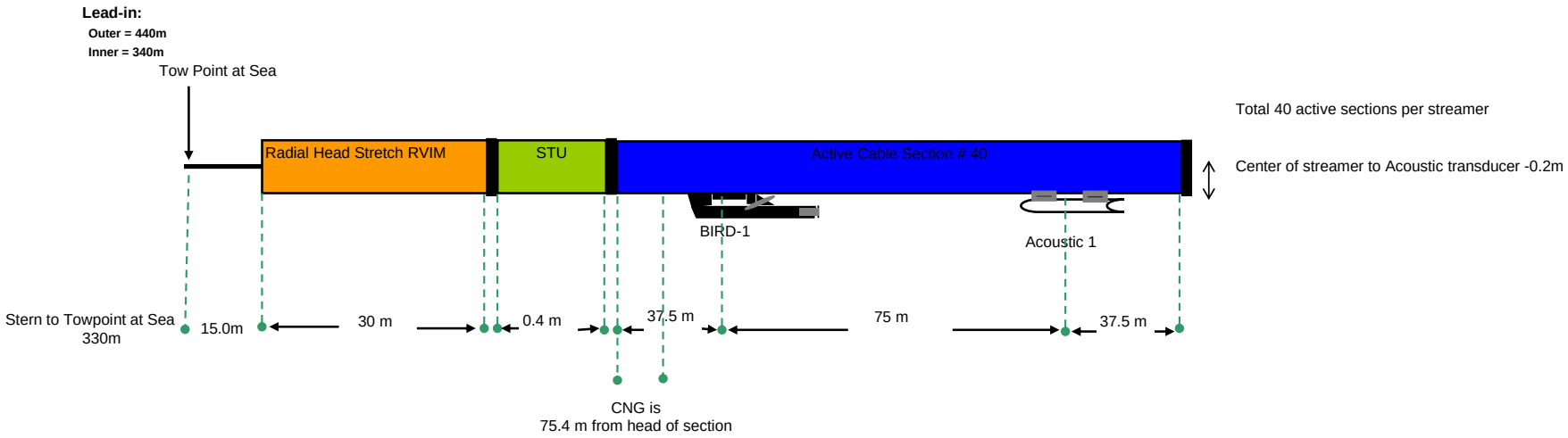

R/V Marcus G. Langseth - Tailbouy

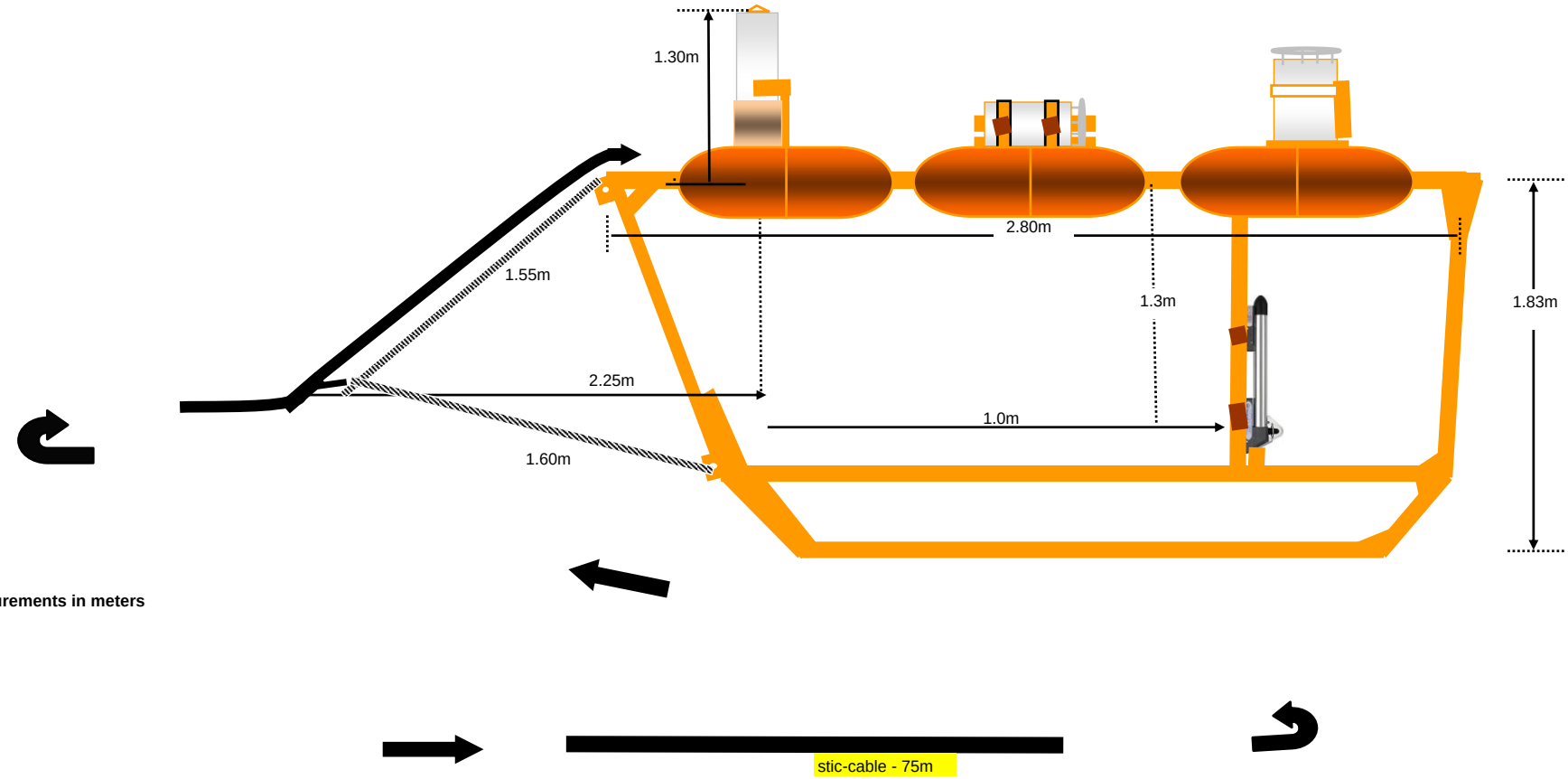

All measurements in meters

R/V Marcus G. Langseth

SPECTRA TIMING

MGL1106
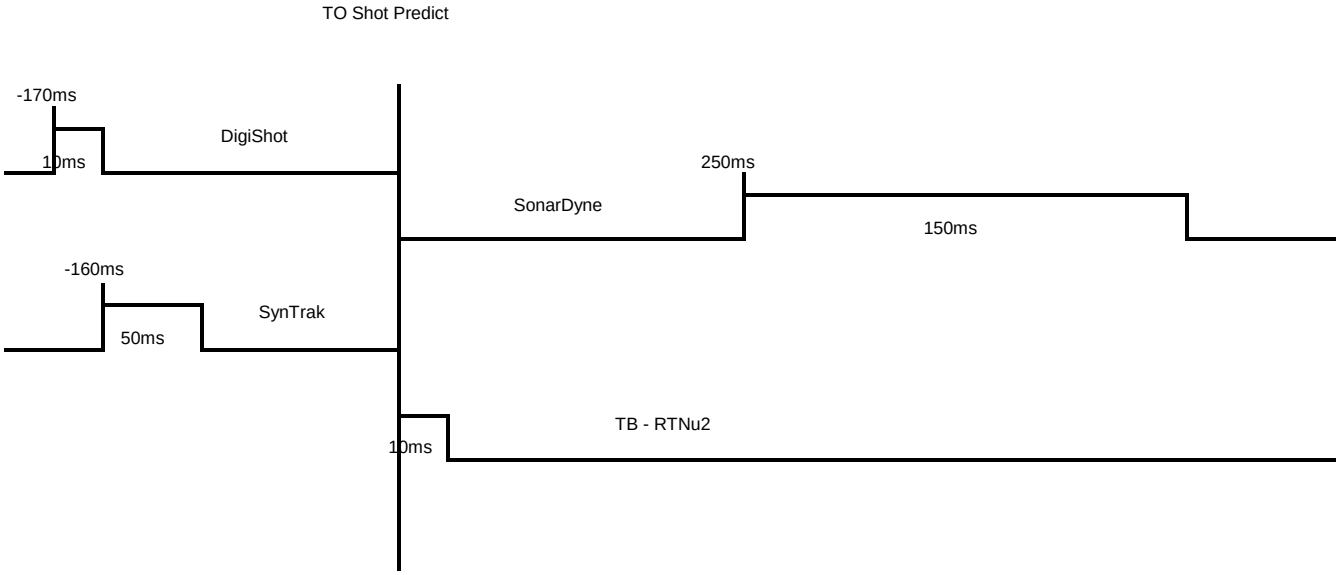
Sawyer 3D